SFP+ Card rev. A1 51-79029-0A10

Block Diagram

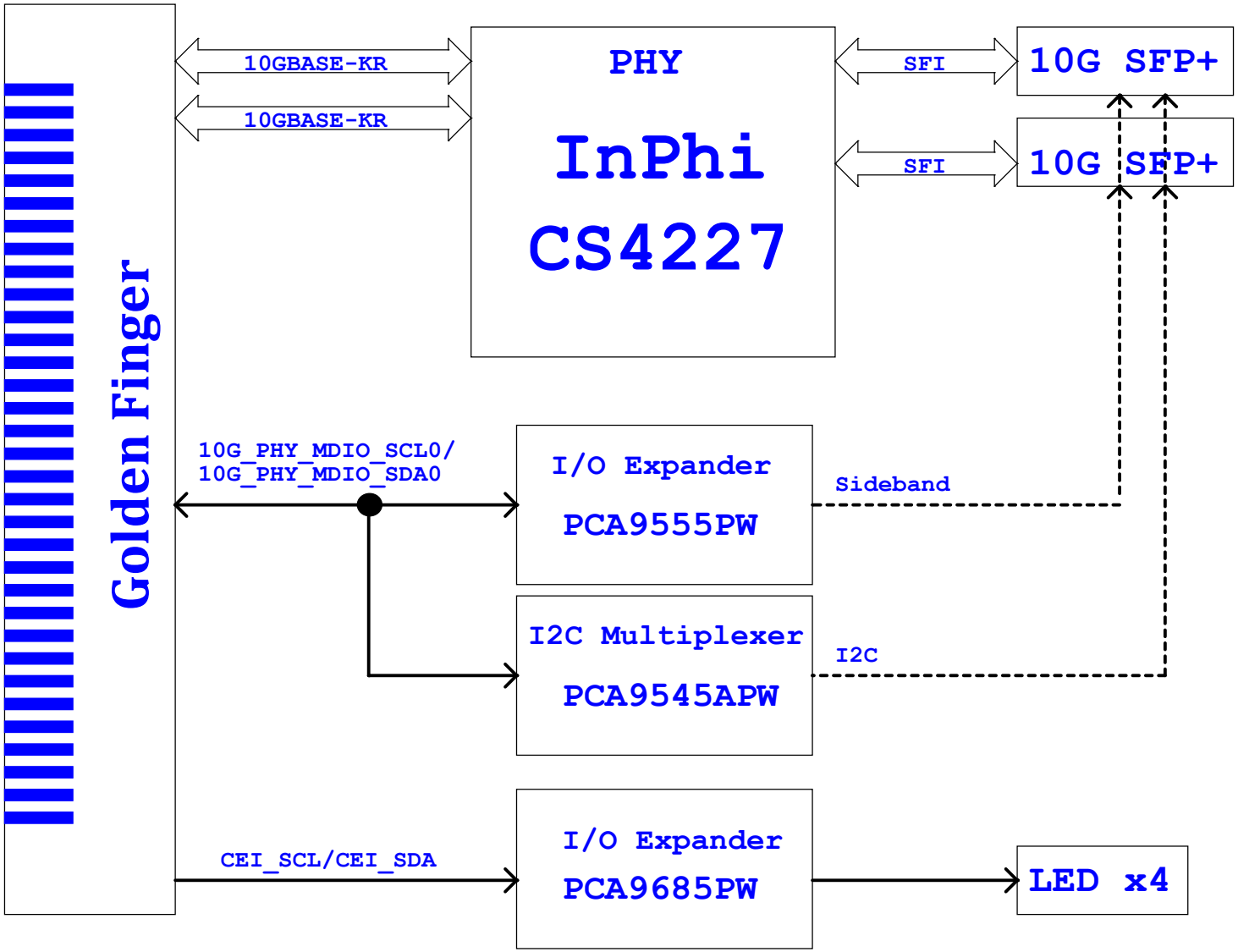

ADLINK TECHNOLOGY INC.
No.66, Huaya 1st Rd., Guishan
Dist.,Taoyuan City 333411,Taiwan
TEL: +886 3 216 5088
FAX: +886 3 3285706
http://www.adlinktech.com

Title	Block Diagram	
Size Custom	Document Number SFP+ Card	Rev A1
Date: Wednesday, June 14, 2023	Sheet 1 of 13	

POWER Diagram

Power Supply Filtering Requirements

Table 3 lists the power supply noise requirements for the analog power supplies. These requirements apply to both 0.9 V, and 1.8 V analog supplies. It is important to note that there is no power sequencing required as long as the power supplies are up within 500 ms of each other. It is recommended that the lower supply voltage be up before the higher supply voltage.

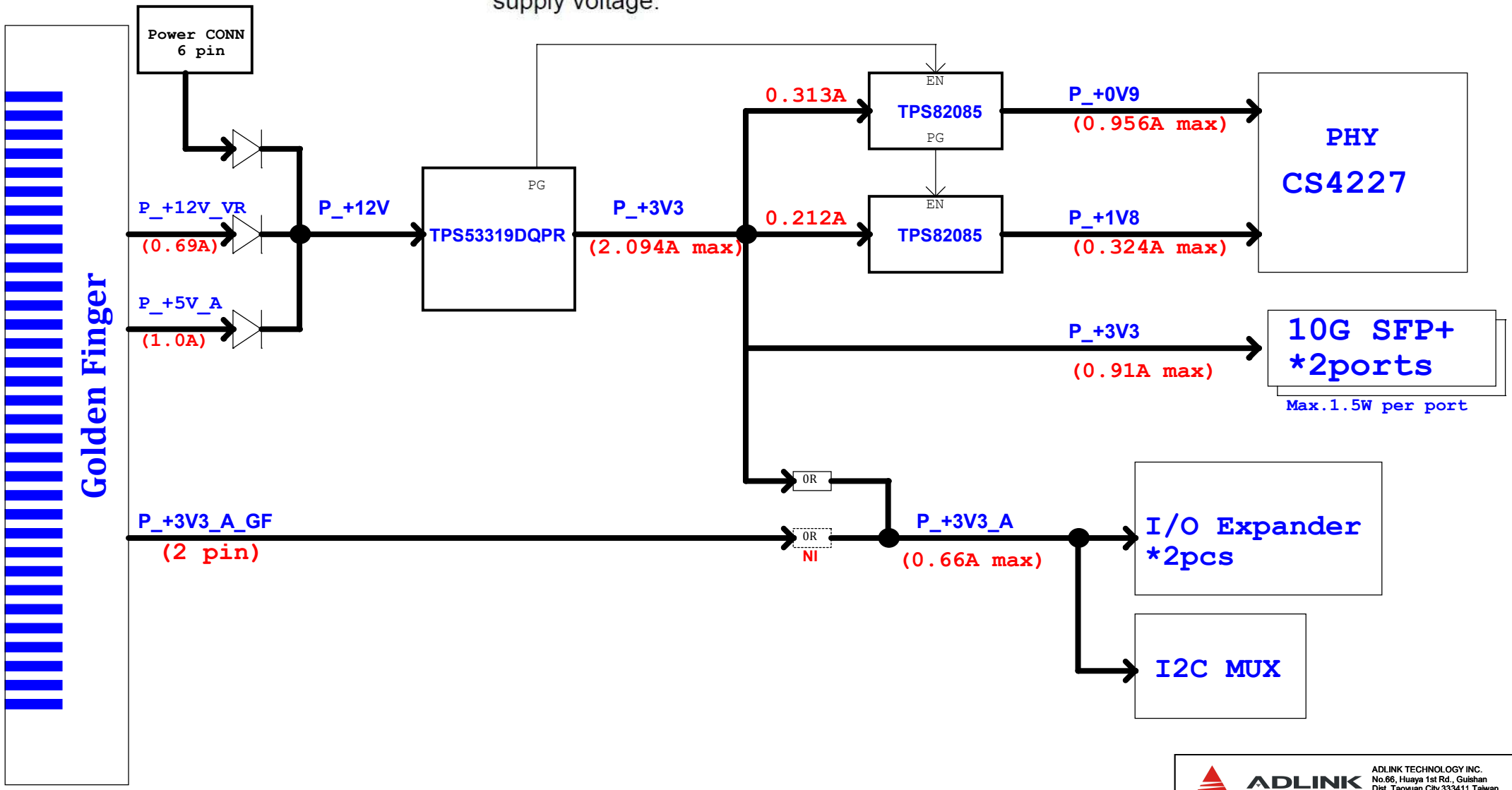

ADLINK TECHNOLOGY INC.
ADLINK TECHNOLOGY INC.
No.66, Huaya 1st Rd., Guishan
Dist.,Taoyuan City 333411,Taiwan
TEL: +886 3 216 5088
FAX: +886 3 3285706
http://www.adlinktech.com

Title	Power Diagram	
Size Custom	Document Number SFP+ Card	Rev A1
Date: Wednesday, June 14, 2023	Sheet 2 of 13	

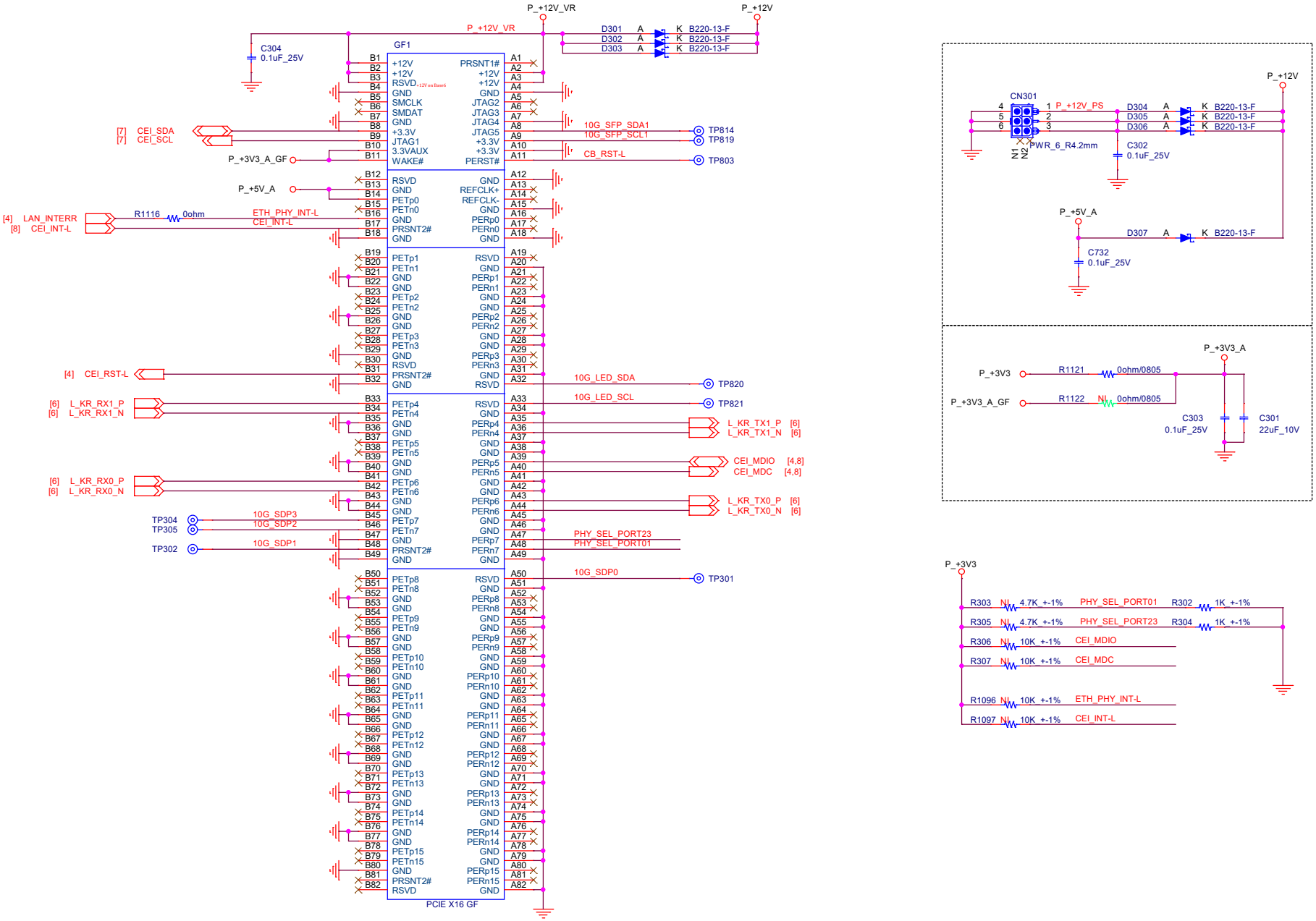

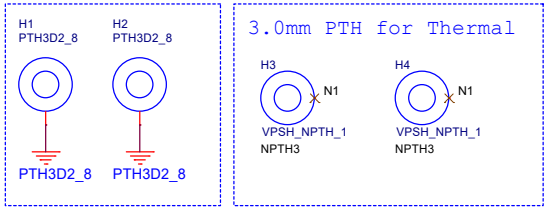

ADLINK TECHNOLOGY INC.
No.66, Huaya 1st Rd., Guishan
Dist.,Taoyuan City 333411,Taiwan
TEL: +886 3 216 5088
FAX: +886 3 3285706
http://www.adlinktech.com

Title	Golden Finger
Size: Custom	Document Number: SFP+ Card
Rev	A1
Date:	Wednesday, June 14, 2023
Sheet	3 of 13

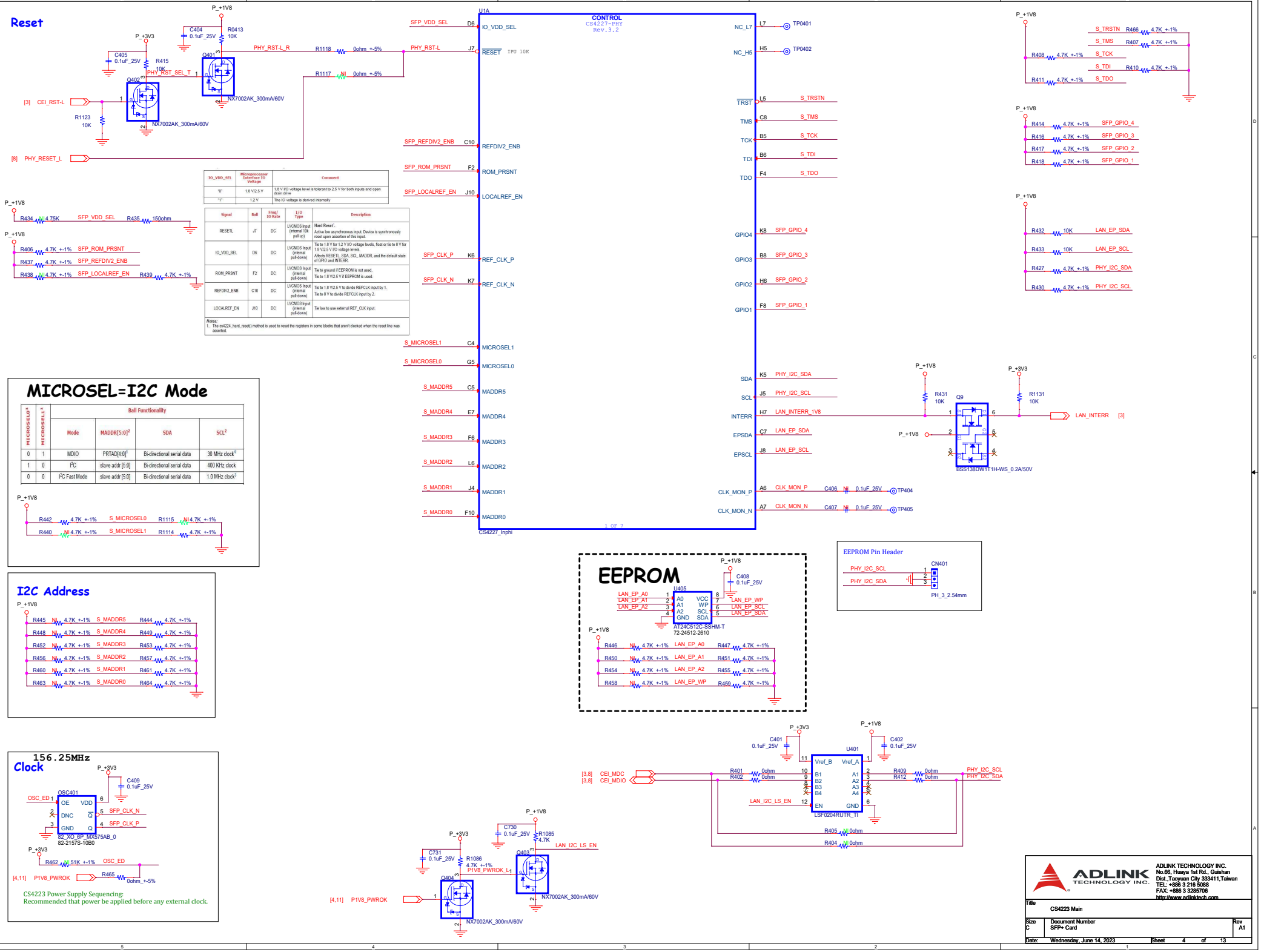

IO_VDD_SEL	Microprocessor Interface IO Voltage	Comment
"0"	1.8 V/2.5 V	1.8 V I/O voltage level is tolerant to 2.5 V for both inputs and open drain drive
"1"	1.2 V	The IO voltage is derived internally

Signal	Ball	Freq/ 10 Rate	I/O Type	Description
RESETL	J7	DC	LVCMOS Input (internal 10k pull up)	Hard Reset . Active low asynchronous input. Device is synchronously reset upon assertion of this input.
IO_VDD_SEL	D6	DC	LVCMOS Input (internal pull-down)	Tie to 1.8 V for 1.2 V I/O voltage levels, float or tie to 0 V for 1.8 V/2.5 V I/O voltage levels. Affects RESETL, SDA, SCL, MADDR, and the default state of GPIO and INTERR.
ROM_PRSNT	F2	DC	LVCMOS Input (internal pull-down)	Tie to ground if EEPROM is not used. Tie to 1.8 V/2.5 V if EEPROM is used.
REFDIV2_ENB	C10	DC	LVCMOS Input (internal pull-down)	Tie to 1.8 V/2.5 V to divide REFCLK input by 1. Tie to 0 V to divide REFCLK input by 2.
LOCALREF_EN	J10	DC	LVCMOS Input (internal pull-down)	Tie low to use external REF_CLK input.

Notes:
1. The cs4224_hard_reset() method is used to reset the registers in some blocks that aren't clocked when the reset line was asserted.

MICROSEL0[3]	MICROSEL1[3]	Ball Functionality			
		Mode	MADDR[5:0][2]	SDA	SCL[2]
0	1	MDIO	PRTAD[4:0][1]	Bi-directional serial data	30 MHz clock[4]
1	0	I²C	slave addr [5:0]	Bi-directional serial data	400 KHz clock
0	0	I²C Fast Mode	slave addr [5:0]	Bi-directional serial data	1.0 MHz clock[3]

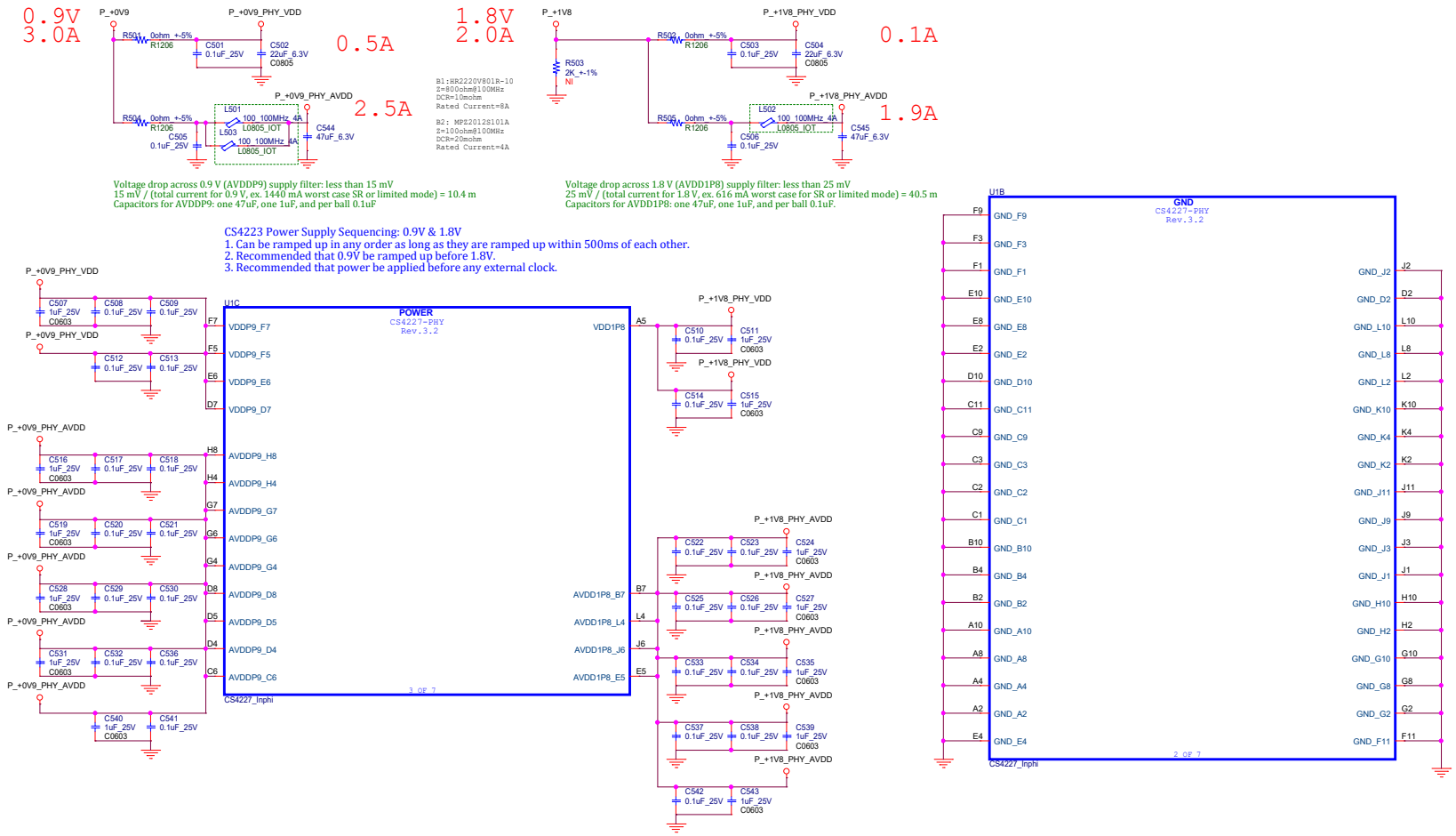

ADLINK TECHNOLOGY INC.
ADLINK TECHNOLOGY INC.
No.66, Huaya 1st Rd., Guishan
Dist.,Taoyuan City 333411,Taiwan
TEL: +886 3 216 5088
FAX: +886 3 3285706
http://www.adlinktech.com

Title	CS4223 PWR	
Size C	Document Number SFP+ Card	Rev A1
Date: Wednesday, June 14, 2023	Sheet 5 of 13	

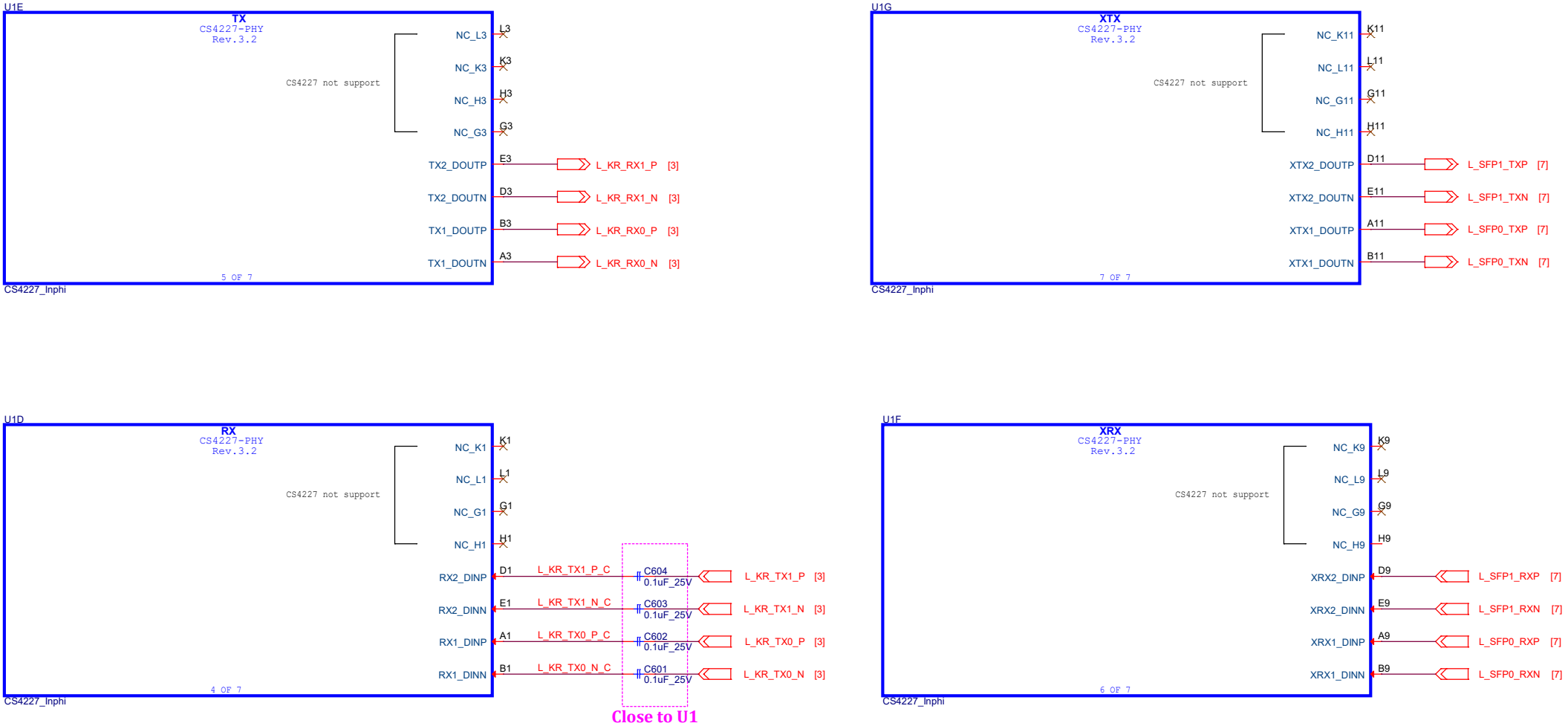

ADLINK TECHNOLOGY INC.
No.66, Huaya 1st Rd., Guishan
Dist.,Taoyuan City 333411,Taiwan
TEL: +886 3 216 5088
FAX: +886 3 3285706
http://www.adlinktech.com

Title	CS4223 Signal	
Size B	Document Number SFP+ Card	Rev A1
Date: Wednesday, June 14, 2023	Sheet 6 of 13	

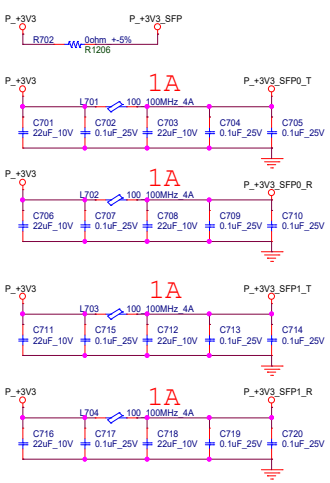

SFF-8431 Rev 4.1 Addendum
2.8 SFP+ Power Requirements

The module host has two 3.3 V power contacts, one supplying the module transmitter voltage (VccT) and the other supplying the module receiver voltage (VccR). The maximum current capacity, both continuous and peak, for each connector contact is 800 mA.

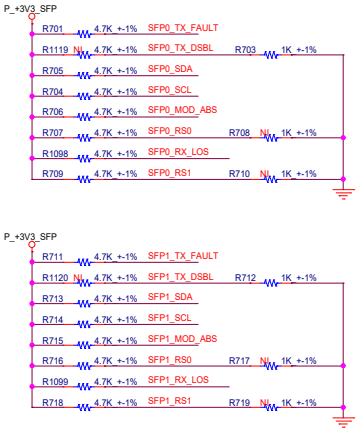

Conn-0

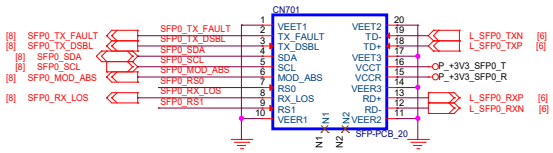

Conn-1

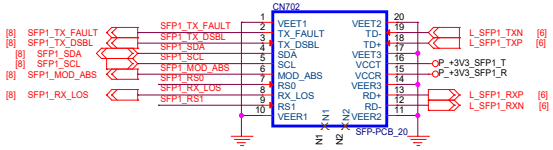

Cage-0/1

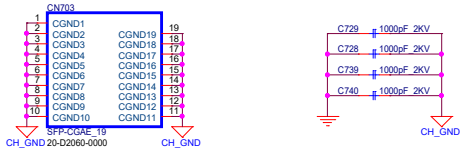

LED

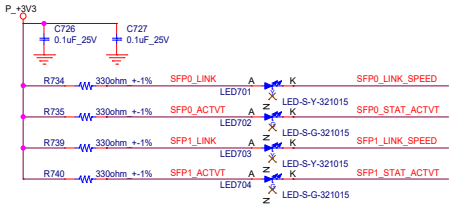

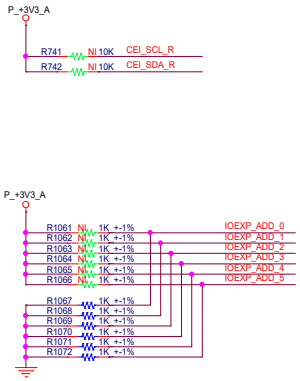

I/O Expander for LED

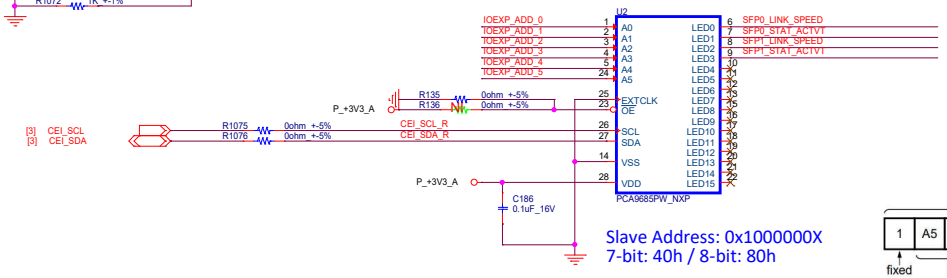

Slave Address: 0x1000000X
7-bit: 40h / 8-bit: 80h

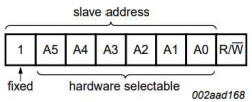

MICROSEL0[3]	MICROSEL1[3]	Ball Functionality			
		Mode	MADDR[5:0][2]	SDA	SCL[2]
0	1	MDIO	PRTAD[4:0][1]	Bi-directional serial data	30 MHz clock[4]
1	0	I²C	slave addr [5:0]	Bi-directional serial data	400 KHz clock
0	0	I²C Fast Mode	slave addr [5:0]	Bi-directional serial data	1.0 MHz clock[3]

ADLINK TECHNOLOGY INC.
No.66, Huaya 1st Rd., Guishan Dist.,Taoyuan City 333411,Taiwan
TEL: +886 3 216 5088
FAX: +886 3 3285706
http://www.adlinktech.com

Title: CS4223 SFP+ Port 0/1

Size	Document Number	Rev
C	SFP+ Card	A1

Date: Wednesday, June 14, 2023 Sheet 7 of 13

I/O Expander for Port 0&1 Sideband Signals

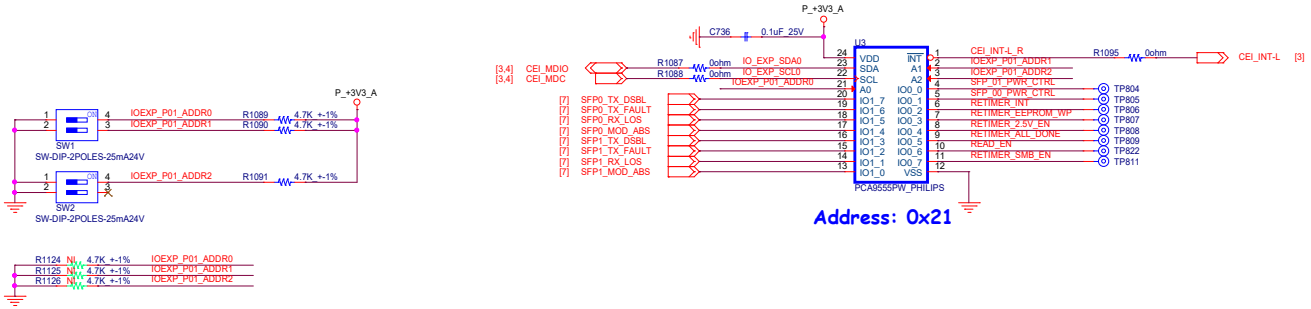

Address: 0x21

I2C Multiplexer

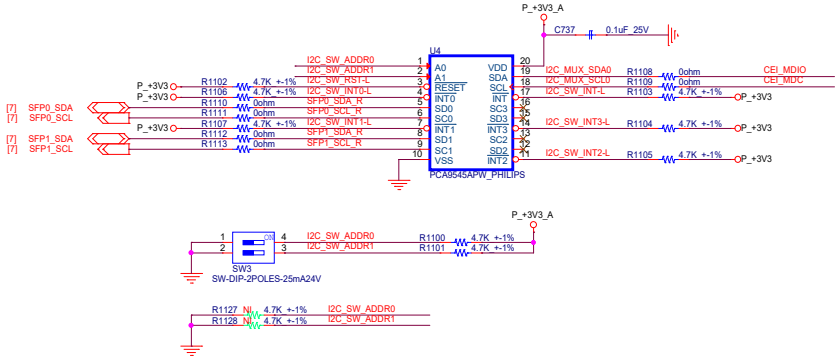

Reset

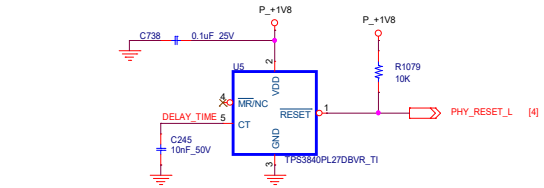

C245=10nF-->Delay times=6.2ms

ADLINK TECHNOLOGY INC.
No.66, Huaya 1st Rd., Guishan
Dist.,Taoyuan City 333411,Taiwan
TEL: +886 3 216 5088
FAX: +886 3 3285706
http://www.adlinktech.com

Title		
	CS4223 I/O Expander	
Size C	Document Number SFP+ Card	Rev A1
Date: Monday, June 19, 2023	Sheet 8 of 13	

P3V3 Specification:
Vout: 3.3V
Imax: 10.3A
Istep: 5.2A
Slew Rate: 1A/uS
TOB: + - 5.0%
Switching Frequency per Phase: 500kHZ

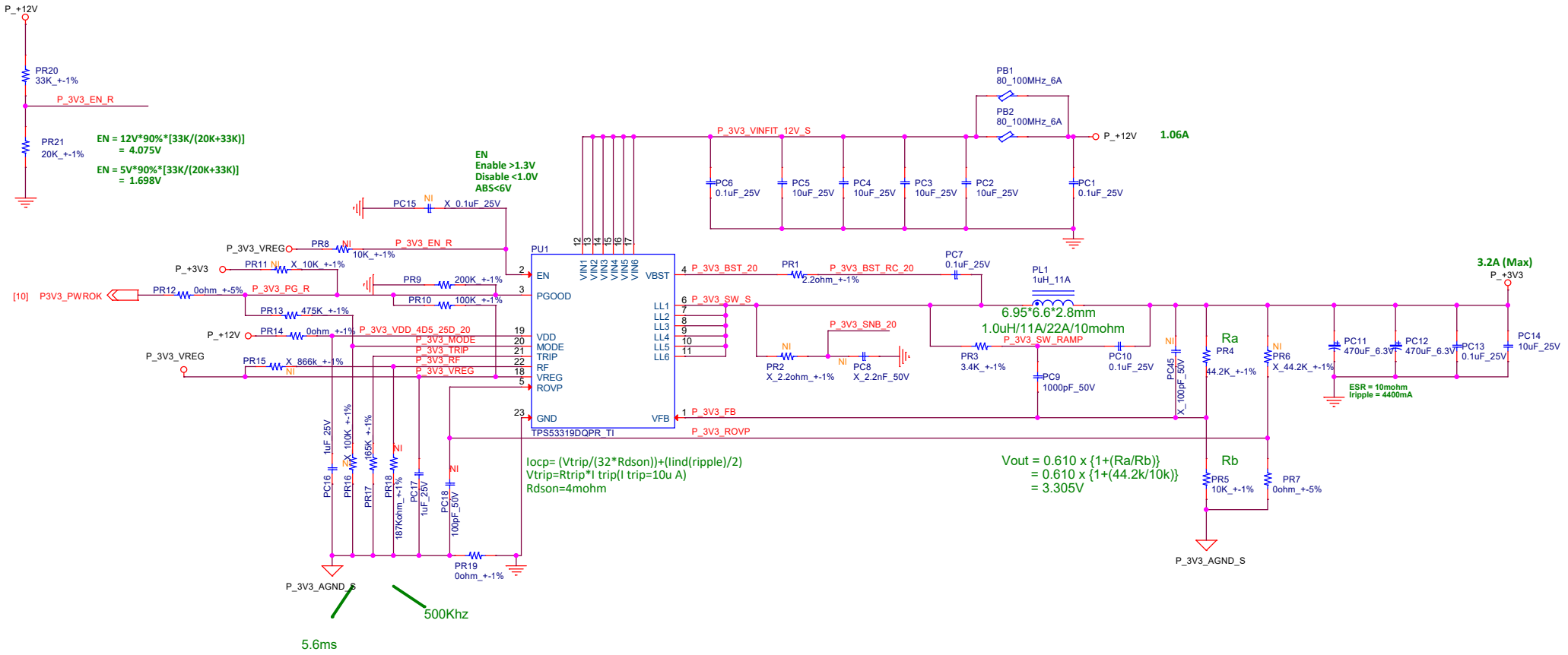

ADLINK TECHNOLOGY INC.
No.66, Huaya 1st Rd., Guishan
Dist.,Taoyuan City 333411,Taiwan
TEL: +886 3 216 5088
FAX: +886 3 3285706
http://www.adlinktech.com

Title	P3V3	
Size: Custom	Document Number: SFP+ Card	Rev: A1
Date: Wednesday, June 14, 2023	Sheet 9 of 13	

P0V9 Specification:
Vout: 0.9V
Imax: 3A
Istep: 1.5A
Slew Rate: 1A/uS
TOB: + - 5.0%
Switching Frequency per Phase: 2.4MHZ

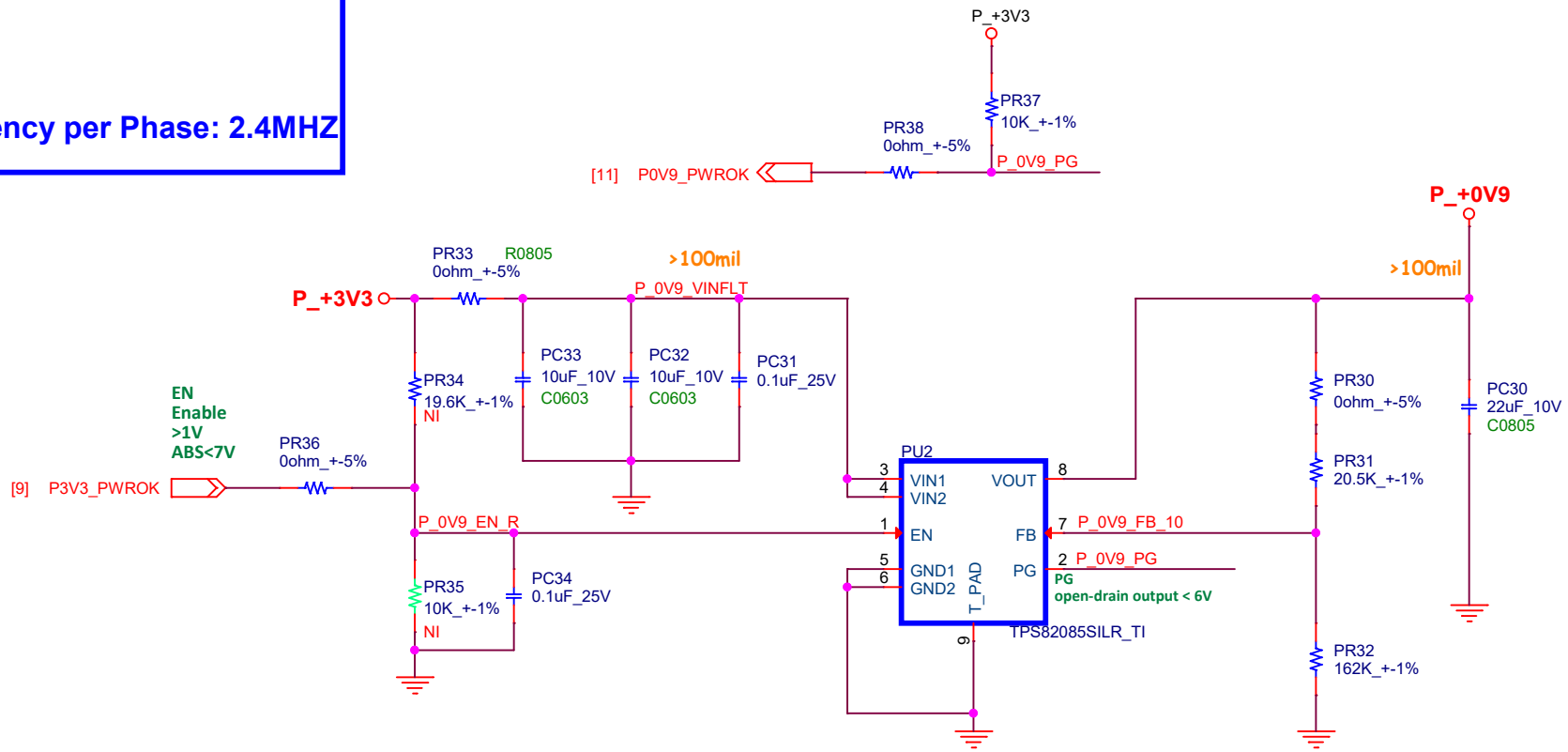

Vout = 0.8 x (1+20.5K/162K) = 0.901V

ADLINK TECHNOLOGY INC.
No.66, Huaya 1st Rd., Guishan
Dist.,Taoyuan City 333411,Taiwan
TEL: +886 3 216 5088
FAX: +886 3 3285706
http://www.adlinktech.com

Title		
	P0V9	
Size: Custom	Document Number: SFP+ Card	Rev: A1
Date: Wednesday, June 14, 2023	Sheet 10 of 13	

P1V8 Specification:
Vout: 1.8V
Imax: 2A
Istep: 1A
Slew Rate: 1A/uS
TOB: + - 5.0%
Switching Frequency per Phase: 2.4MHZ

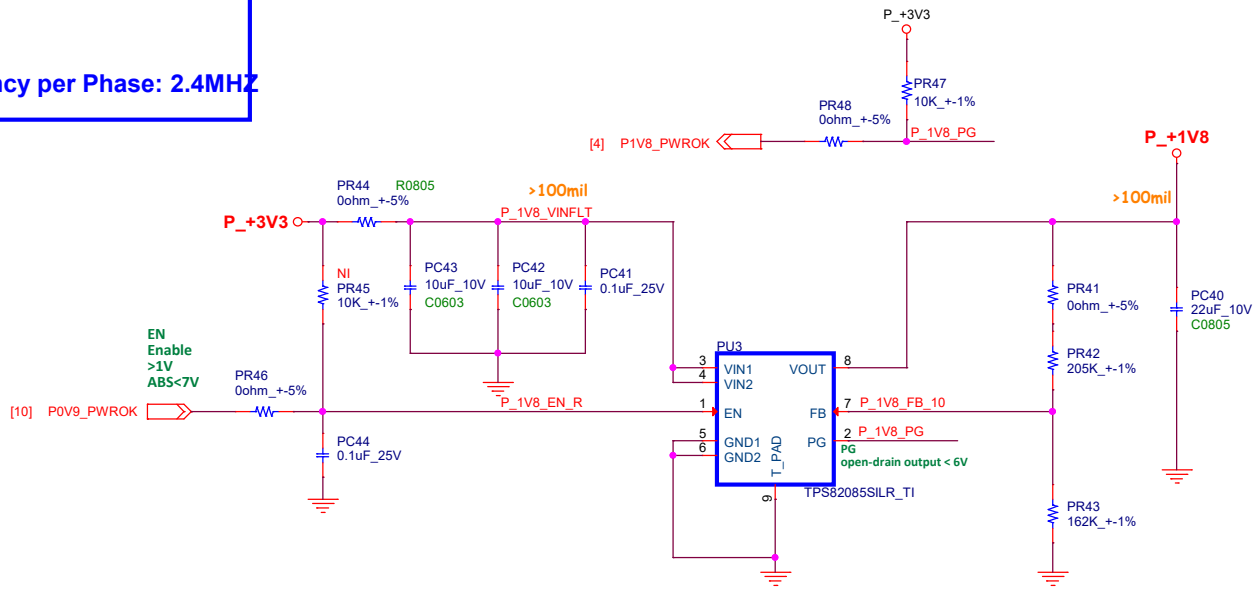

Vout = 0.8 x (1+205K/162K) = 1.812V

ADLINK TECHNOLOGY INC.
No.66, Huaya 1st Rd., Guishan
Dist.,Taoyuan City 333411,Taiwan
TEL: +886 3 216 5088
FAX: +886 3 3285706
http://www.adlinktech.com

Title	P1V8	
Size B	Document Number SFP+ Card	Rev A1
Date: Wednesday, June 14, 2023	Sheet 11 of 13	

Mechanical

ADLINK TECHNOLOGY INC.
No.66, Huaya 1st Rd., Guishan
Dist.,Taoyuan City 333411,Taiwan
TEL: +886 3 216 5088
FAX: +886 3 3285706
http://www.adlinktech.com

Title	Mechanical	
Size Custom	Document Number SFP+ Card	Rev A1
Date: Wednesday, June 14, 2023	Sheet 12 of 13	

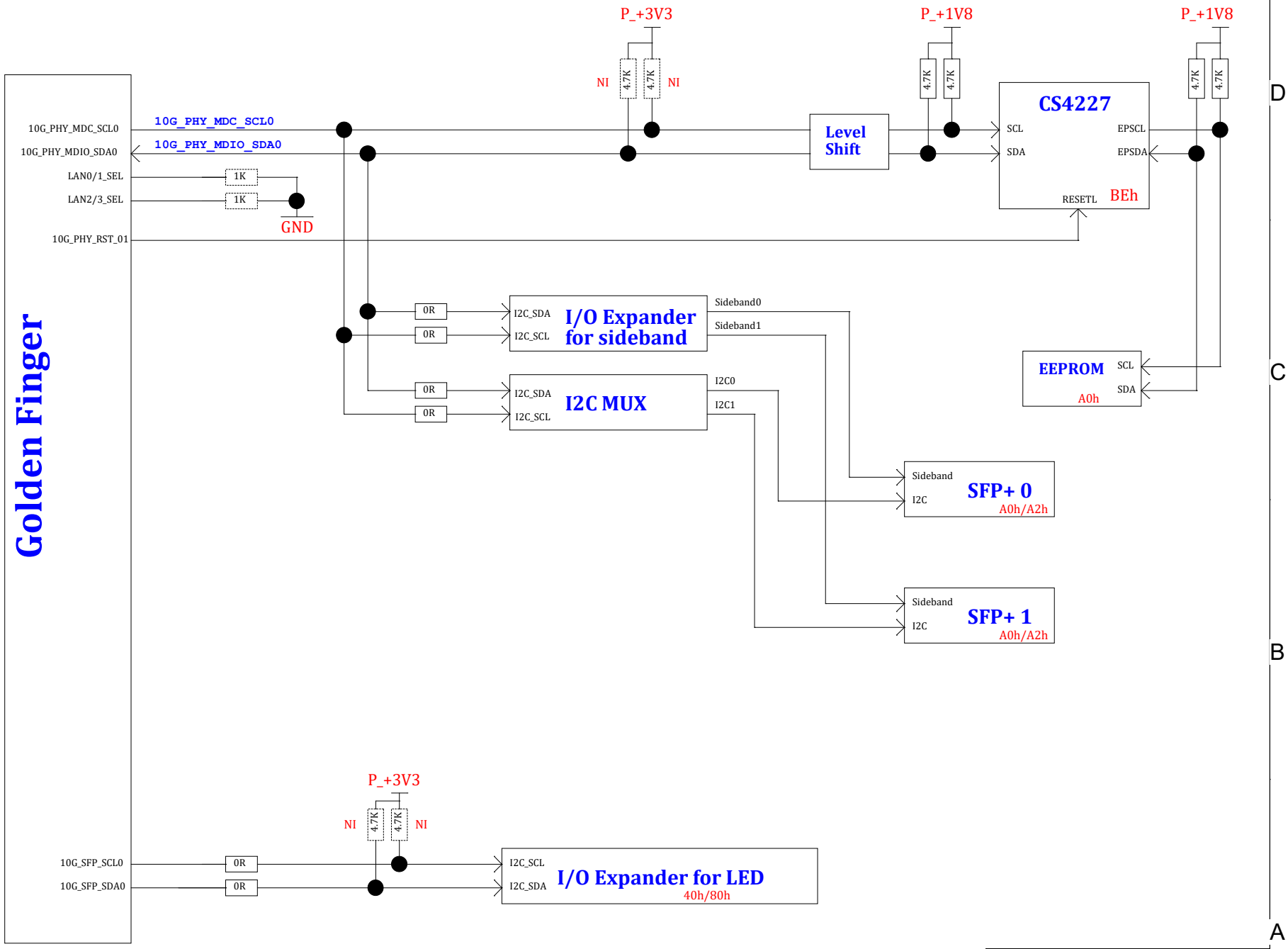

ADLINK TECHNOLOGY INC.
ADLINK TECHNOLOGY INC.
No.66, Huaya 1st Rd., Guishan
Dist.,Taoyuan City 333411,Taiwan
TEL: +886 3 216 5088
FAX: +886 3 3285706
http://www.adlinktech.com

Title: I2C Topology

Size: Custom | Document Number: SFP+ Card | Rev: A1

Date: Wednesday, June 14, 2023 | Sheet 13 of 13